YAUCA

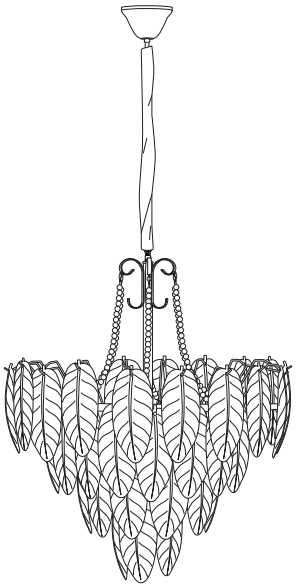

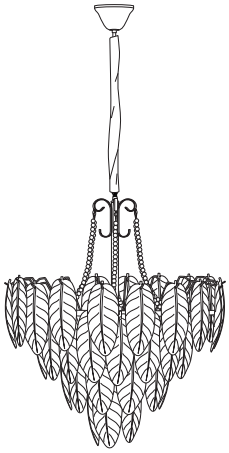

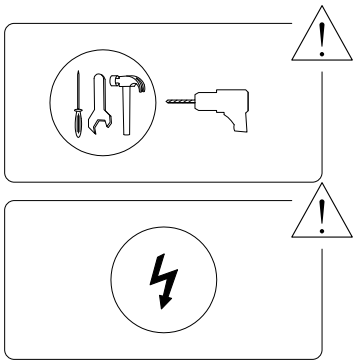

1/9

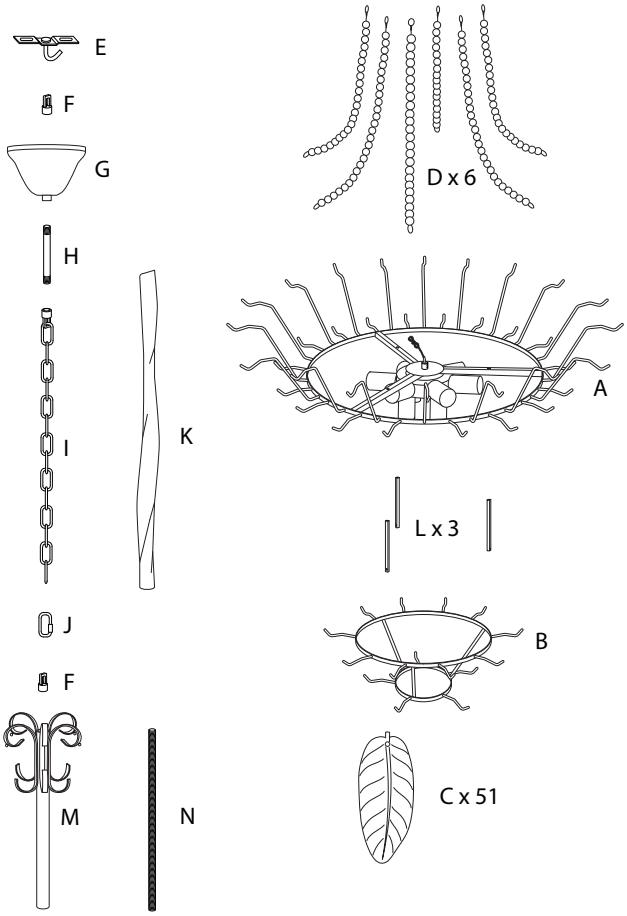

A  x 1	B  x 1	C  x 51	D  x 6
E 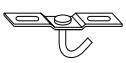 x 1	F  x 2	G  x 1	H  x 1
I x 1	J  x 1	K x 1	L x 3
M  x 1	N x 1	O  x 1	P x 2	R x 4
S  x 1	T  x 3	U  x 3	W  x 2	X  x 1

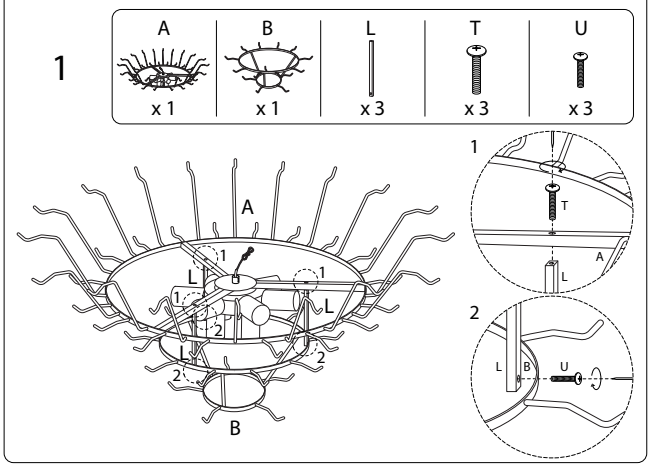
1
A
B
L
T
U
x 1
x 1
x 3
x 3
x 3
A
B
L
1
2
T
A
L
L
B
U

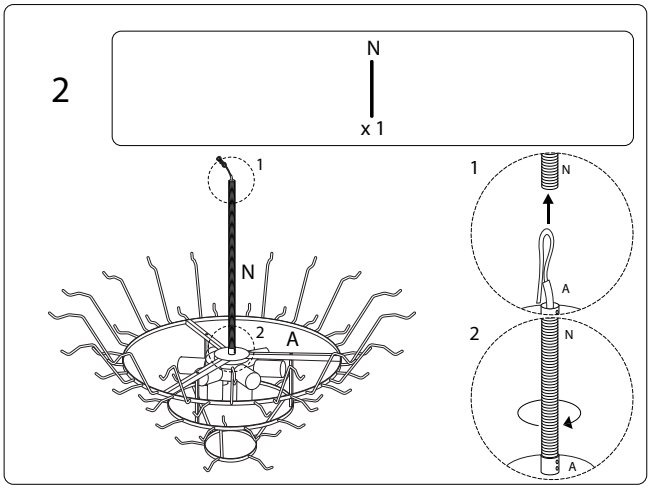
2
N
x 1
1
N
2
A
1
N
A
2
N
A

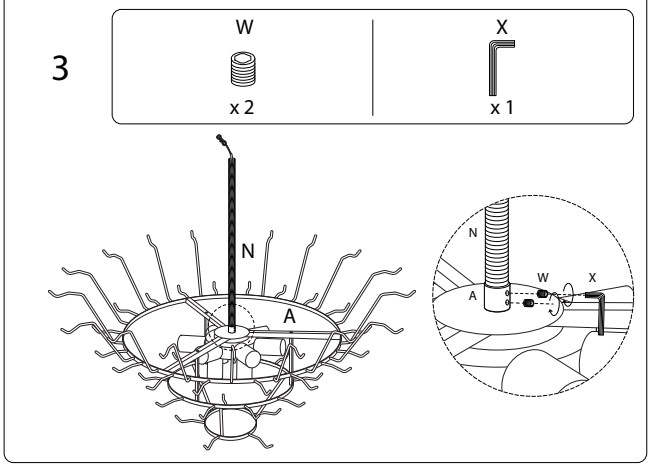
3
W
X
x 2
x 1
N
A
N
A
W
X

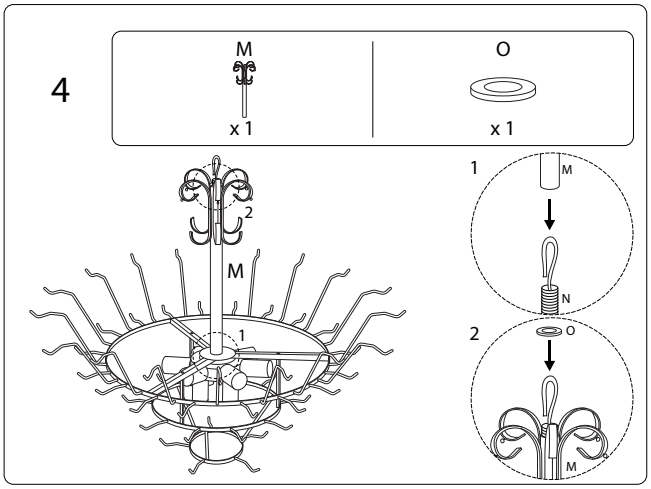
4
M
O
x 1
x 1
2
M
1
1
M
N
2
O
M

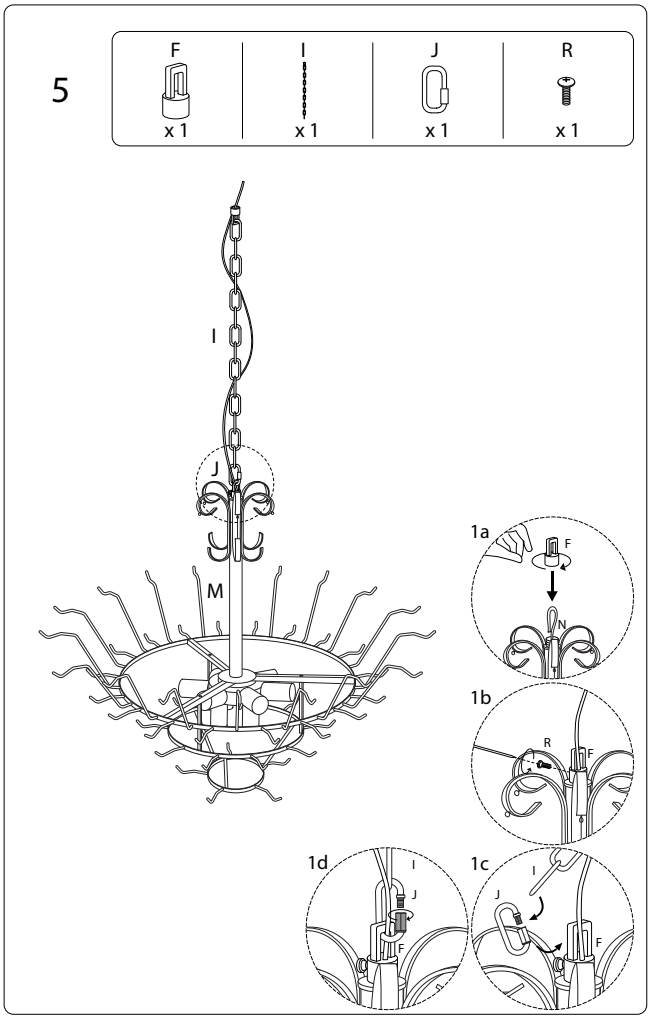
5
F
I
J
R
x 1
x 1
x 1
x 1
I
J
M
1a
F
N
1b
R
F
1d
I
J
F
1c
I
J
F

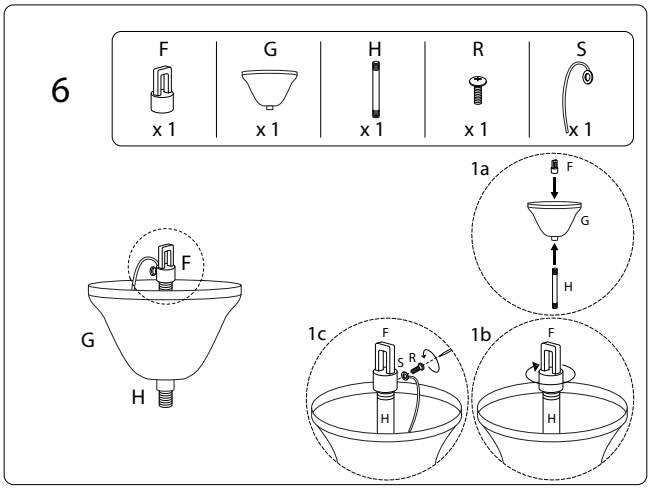
6
F
G
H
R
S
x 1
x 1
x 1
x 1
x 1
1a
F
G
H
F
G
H
1c
F
S
R
H
1b
F
H

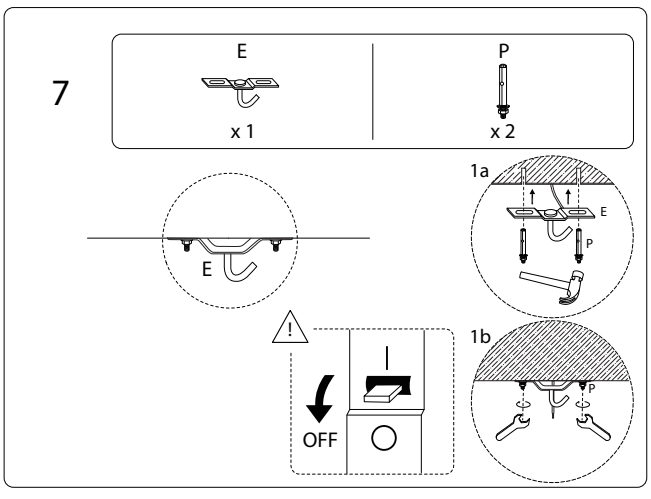
7
E
P
x 1
x 2
1a
E
P
E
1b
P
OFF

8

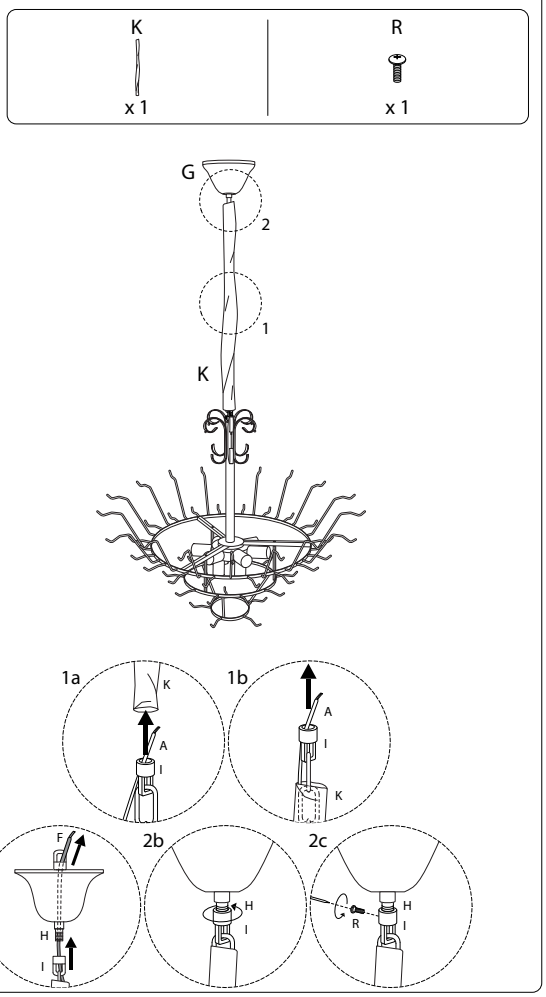

6/9

2613/YAUCA/250725/

9

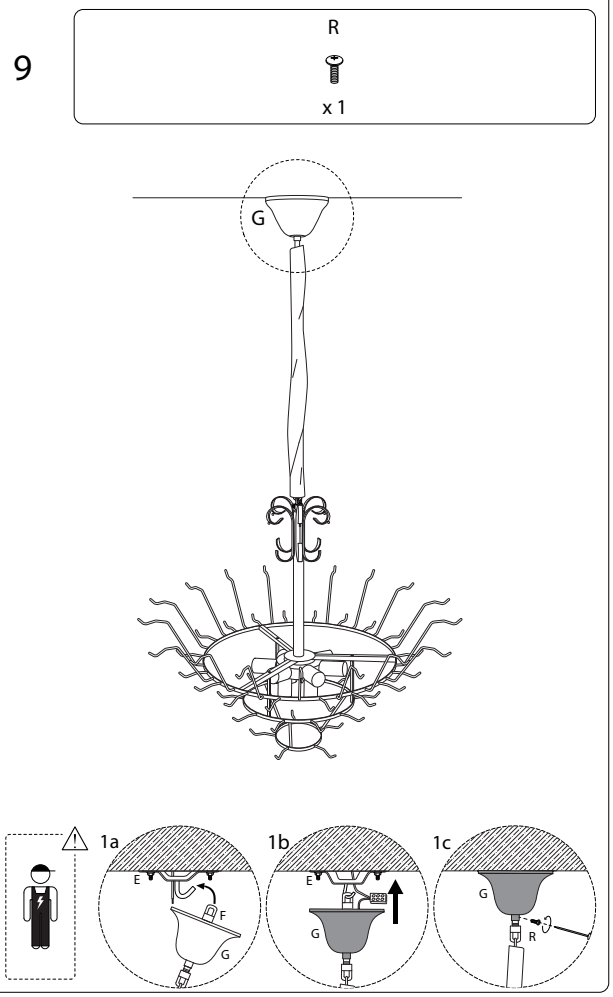

7/9

2613/YAUCA/250725/

10

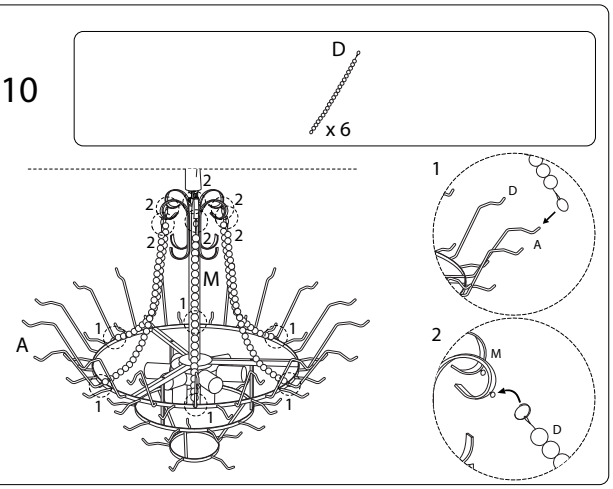

11

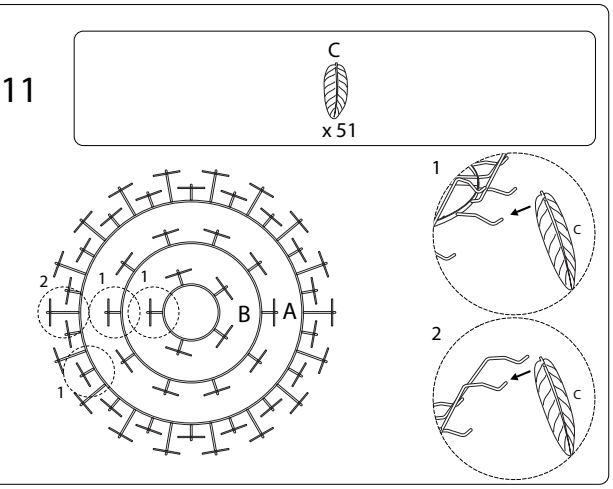

8/9

2613/YAUCA/250725/

12

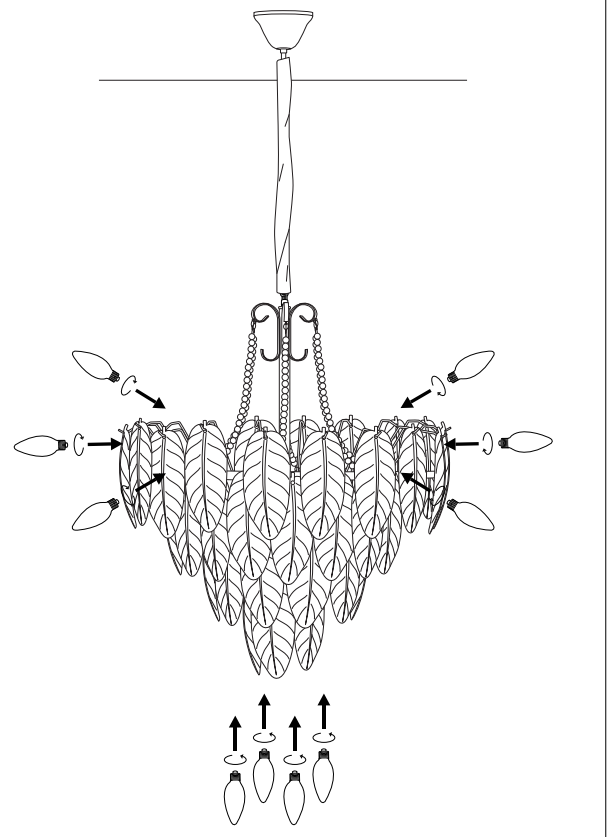

9/9

2613/YAUCA/250725/